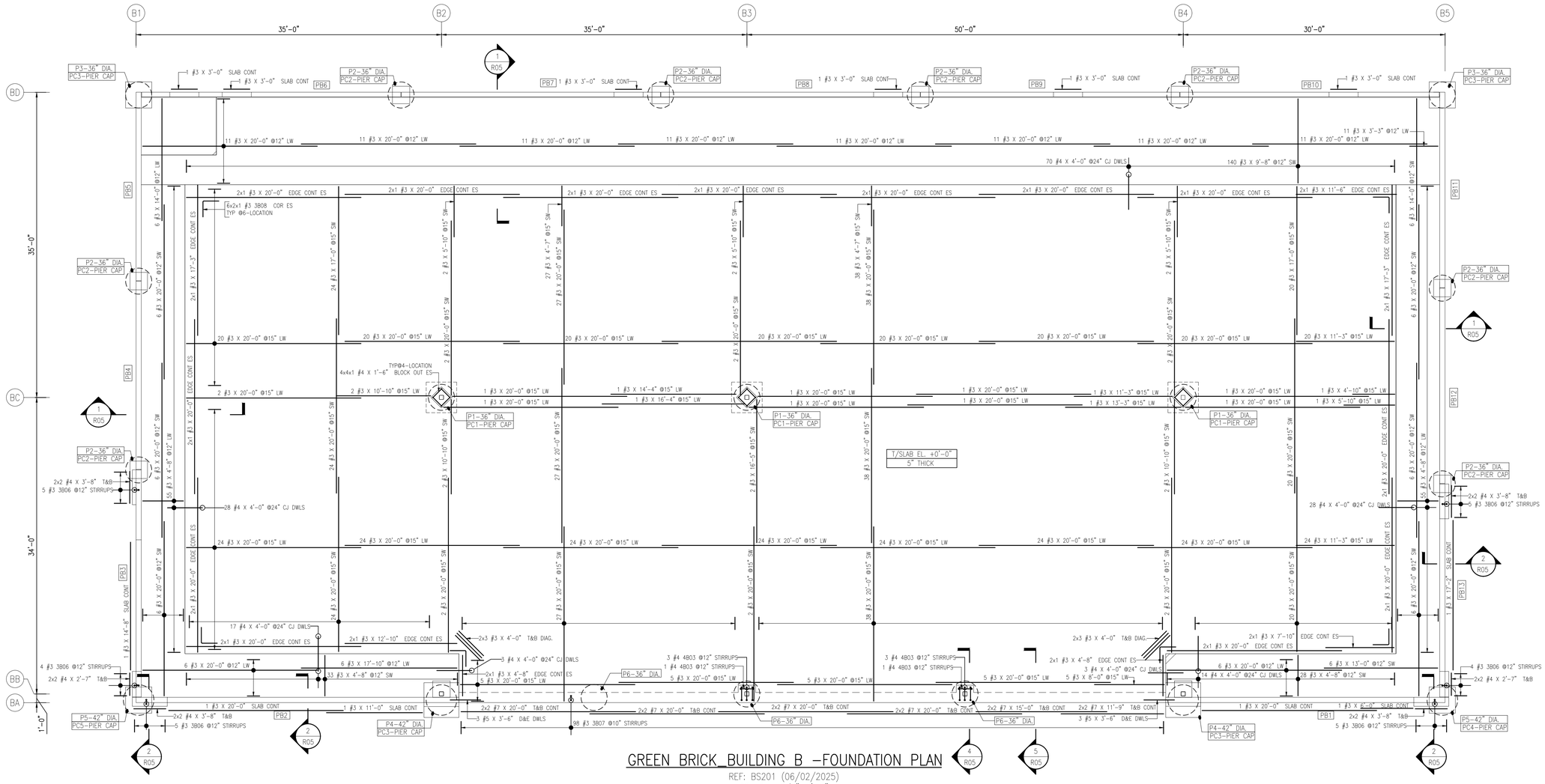

GREEN BRICK_BUILDING B –FOUNDATION PLAN

REF: BS201 (06/02/2025)
SCALE = 1/6"=1'-0"

Release Number: FOUNDATION DETAILS							BAR LIST											
Bar Mark	Qty	Size	Total Length	Type	'A'	'B'	'C'	'D'	'E'	'F'	'G'	'H'	'J'	'K'	'O'	'R'
3B01	16	#3	7'-3 K"	T1	0'-4 K"	2'-9 K"	0'-5 K"	2'-9 K"	0'-5 K"		0'-4 K"					
3B02	8	#3	9'-4"	T1	0'-4 K"	3'-10"	0'-5 K"	3'-10"	0'-5 K"		0'-4 K"					
3B03	16	#3	8'-6 K"	T1	0'-4 K"	3'-5 K"	0'-5 K"	3'-5 K"	0'-5 K"		0'-4 K"					
3B04	24	#3	9'-5 K"	T1	0'-4 K"	3'-10 K"	0'-5 K"	3'-10 K"	0'-5 K"		0'-4 K"					
3B05	32	#3	1'-2"	T9	0'-4 K"	0'-5 K"					0'-4"					
3B06	28	#3	5'-10 K"	T1	0'-4 K"	0'-6"	2'-1"	0'-6"	2'-1"		0'-4 K"					
3B07	98	#3	4'-10 K"	T1	0'-4 K"	0'-6"	1'-7"	0'-6"	1'-7"		0'-4 K"					
3B08	12	#3	3'-8"	17		1'-10"	1'-10"									
3B09	368	#3	9'-3 K"	T3			7'-10 K"				1'-5"				2'-6"	
3B10	92	#3	10'-10"	T3			9'-5"				1'-5"				3'-0"	
4B01	153	#4	3'-6"	17		1'-0"	2'-6"									
4B02	94	#4	3'-6"	17		1'-6"	2'-0"									
4B03	14	#4	6'-11"	T1	0'-4 K"	1'-6"	1'-7"	1'-6"	1'-7"		0'-4 K"					
4B04	6	#4	7'-1"	T1	0'-4 K"	1'-6"	1'-8"	1'-6"	1'-8"		0'-4 K"					
4B05	32	#4	5'-6"	17		1'-6"	2'-6"	1'-6"								
4B06	32	#4	5'-8"	17		1'-7"	2'-6"	1'-7"								
4B07	24	#4	6'-6"	17		1'-6"	3'-6"	1'-6"								
4B08	24	#4	6'-8"	17		1'-7"	3'-6"	1'-7"								
4B09	64	#4	4'-6"	17		1'-6"	1'-6"	1'-6"								
4B10	64	#4	4'-8"	17		1'-7"	1'-6"	1'-7"								
5B01	35	#5	31'-3"	2	0'-10"	29'-7"					0'-10"					
5B02	3	#5	23'-1 K"	2	0'-10"	21'-5 K"					0'-10"					
5B03	5	#5	22'-7 K"	2	0'-10"	20'-11 K"					0'-10"					
5B04	5	#5	27'-7"	2	0'-10"	25'-11"					0'-10"					
5B05	7	#5	33'-6"	2	0'-10"	31'-10"					0'-10"					
5B06	7	#5	38'-6 K"	2	0'-10"	36'-10 K"					0'-10"					
5B07	8	#5	23'-5 K"	2	0'-10"	21'-9 K"					0'-10"					
5B08	5	#5	25'-11 K"	2	0'-10"	24'-3 K"					0'-10"					
5B09	4	#5	23'-11 K"	2	0'-10"	22'-3 K"					0'-10"					
5B10	12	#5	9'-10 K"	T1	0'-5 K"	3'-0"	1'-5 K"	3'-0"	1'-5 K"		0'-5 K"					
5B11	12	#5	10'-1"	T1	0'-5 K"	3'-0"	1'-7"	3'-0"	1'-7"		0'-5 K"					
6B01	4	#6	27'-11"	2	1'-0"	25'-11"					1'-0"					
6B02	2	#6	33'-10"	2	1'-0"	31'-10"					1'-0"					
6B03	3	#6	38'-10 K"	2	1'-0"	36'-10 K"					1'-0"					
6B04	2	#6	26'-3 K"	2	1'-0"	24'-3 K"					1'-0"					
7B01	4	#7	5'-10"	20		1'-2"	3'-6"	1'-2"								
7B02	4	#7	5'-10"	2	1'-2"	3'-6"					1'-2"					
7B03	72	#7	6'-8"	2	1'-2"	5'-6"										
9B01	78	#9	7'-1"	2	1'-7"	5'-6"										

Bar list produced by RebarCAD 2020.0

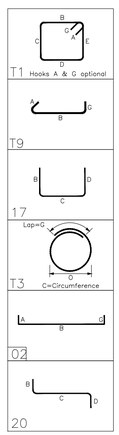

LEGENDS:

V/VERT	- VERTICAL
UNO	- UNLESS NOTED OTHERWISE
TRANS	- TRANSVERSE
TP	- TOP OF PIER
T/SLAB	- TOP OF SLAB
T/FTG	- TOP OF FOOTING
T&B	- TOP & BOTTOM
T	- TOP
STNDEE	- STANDEES
SLD	- SLAB DOWEL
H/HORZ	- HORIZONTAL
DWL	- DOWEL
COR	- CORNER
CONT	- CONTINUOUS
CLR	- CLEAR
CB	- CORNER BAR
B/FTG	- BOTTOM OF FOOTING
B/BOT	- BOTTOM

NOTES:
1. TOP OF FOOTING EL. REFER PLAN
2. TOP OF SOG EL. REFER PLAN
3. COVER DETALS:
   FOR FOOTING: BOTTOM & SIDE = 3", TOP = 2".
   FOR WALLS:
4. STOCK LENGTH USED IS 40'-0"

1 R01B SECTION MARK

LAP NOTES:
LAP VALUE FOR FOUNDATION & SOG

CLASS B LAP 3000 PSI FOR FDN & WALLS

SIZE	TOP	OTHERS
#3	28"	22"
#4	37"	29"
#5	47"	36"
#6	56"	43"
#7	81"	63"
#8	93"	72"
#9	105"	81"
#10	118"	91"

This drawing shall be used only for the placement of the post-tensioning system. Any dimensions and/or elevations noted herein are provided only to facilitate the placement of the post-tensioning strands. Any discrepancies should be noted at the time of approval. Post-Tension Services of Texas assumes no liability for any errors in the layout or dimensions of the building.

SUBMITTAL RECORD

DATE:	FOR:
10-15-2025	FOR APPROVAL
-	-
-	-
DATE: -	1
DATE: -	2

Post-Tension Services of Texas
10501 SPARKMAN DRIVE
DALLAS, TX 75220
OFFICE: 972-845-5500

POST-TENSIONING INSTITUTE
CERTIFIED PLANT

PROJECT INFORMATION

CUSTOMER:	-
PROJECT NAME:	GREEN BRICK
PROJECT LOCATION:	HOUSTON, TEXAS 77027
SHEET DESCRIPTION:	FOUNDATION DETAILS
DETAILER:	KBS

SHEET NUMBER:
R05

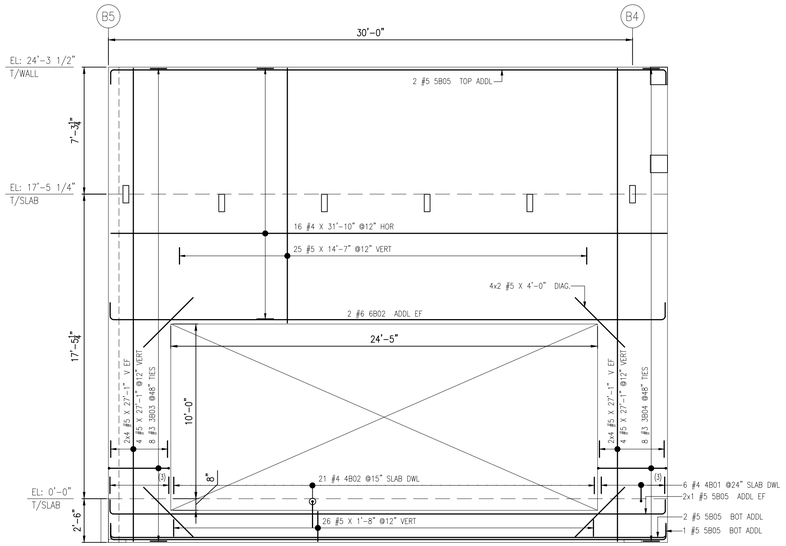

(7 1/4"THK PANEL)

PANEL–PB1

REF: BS702 (06/02/2025)
SCALE = 1/4"=1'-0"

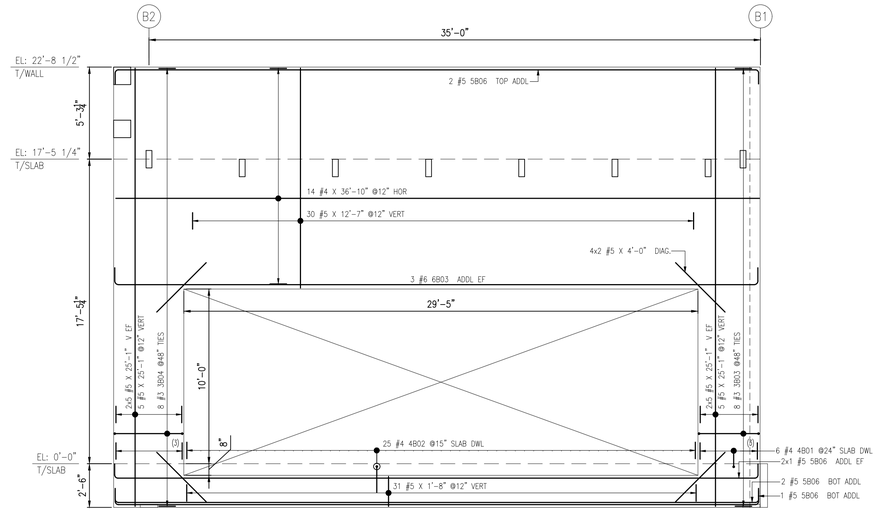

(7 1/4"THK PANEL)

PANEL–PB2

REF: BS702 (06/02/2025)
SCALE = 1/4"=1'-0"

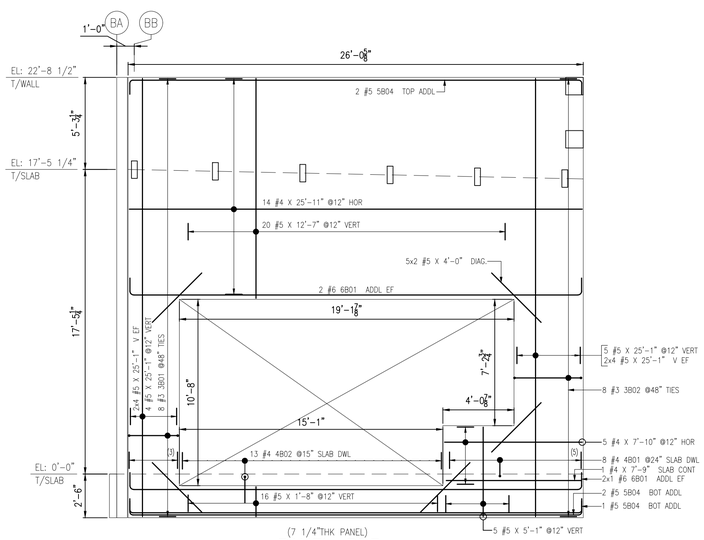

(7 1/4"THK PANEL)

PANEL–PB3

REF: BS702 (06/02/2025)
SCALE = 1/4"=1'-0"

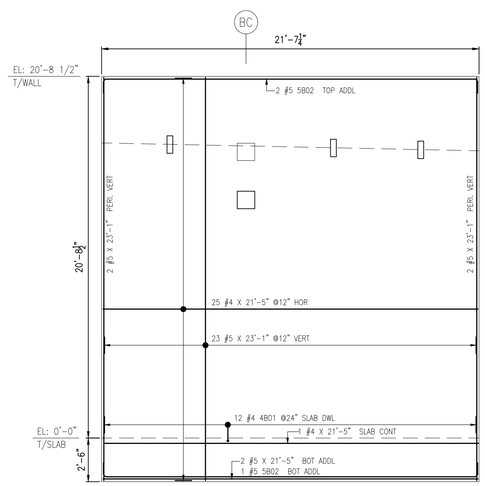

(7 1/4"THK PANEL)

PANEL–PB4

REF: BS702 (06/02/2025)
SCALE = 1/4"=1'-0"

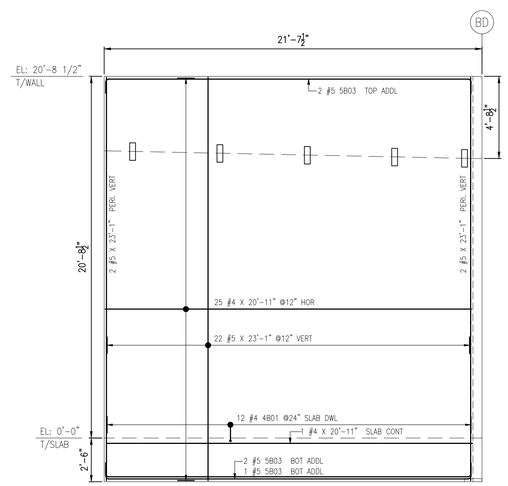

(7 1/4"THK PANEL)

PANEL–PB5

REF: BS702 (06/02/2025)
SCALE = 1/4"=1'-0"

LEGENDS:

V/VERT	– VERTICAL
UNO	– UNLESS NOTED OTHERWISE
TRANS	– TRANSVERSE
TP	– TOP OF PIER
T/SLAB	– TOP OF SLAB
T/FTG	– TOP OF FOOTING
T&B	– TOP & BOTTOM
T	– TOP
STNDEE	– STANDEES
SLD	– SLAB DOWEL
H/HORZ	– HORIZONTAL
DWL	– DOWEL
COR	– CORNER
CONT	– CONTINUOUS
CLR	– CLEAR
CB	– CORNER BAR
B/FTG	– BOTTOM OF FOOTING
B/BOT	– BOTTOM

NOTES:

1. TOP OF FOOTING EL. REFER PLAN
2. TOP OF SOG EL. REFER PLAN
3. COVER DETALS:
   FOR FOOTING: BOTTOM & SIDE = 3", TOP = 2".
   FOR WALLS: 3/4"
4. STOCK LENGTH USED IS 40'-0"

1 R01B SECTION MARK

LAP NOTES:

LAP VALUE FOR PANEL

CLASS B LAP 4000 PSI FOR FDN & WALLS		
SIZE	TOP	OTHERS
#3	24"	19"
#4	32"	25"
#5	40"	31"
#6	48"	37"
#7	70"	54"
#8	80"	62"

This drawing shall be used only for the placement of the post-tensioning system. Any dimensions and/or elevations noted herein are provided only to facilitate the placement of the post-tensioning strands. Any discrepancies should be noted at the time of approval. Post-Tension Services of Texas assumes no liability for any errors in the layout or dimensions of the building.

SUBMITTAL RECORD

DATE:	FOR:
10-15-2025	FOR APPROVAL
–	–
–	–
–	–
–	–

Post-Tension Services of Texas
10501 SPARKMAN DRIVE
DALLAS, TX 75220
OFFICE: 972-845-5500

POST-TENSIONING INSTITUTE CERTIFIED PLANT

PROJECT INFORMATION

CUSTOMER:	–
PROJECT NAME:	GREEN BRICK
PROJECT LOCATION:	HOUSTON, TEXAS 77027
SHEET DESCRIPTION:	PANEL DETAILS
DETAILER:	KBS

SHEET NUMBER: R06

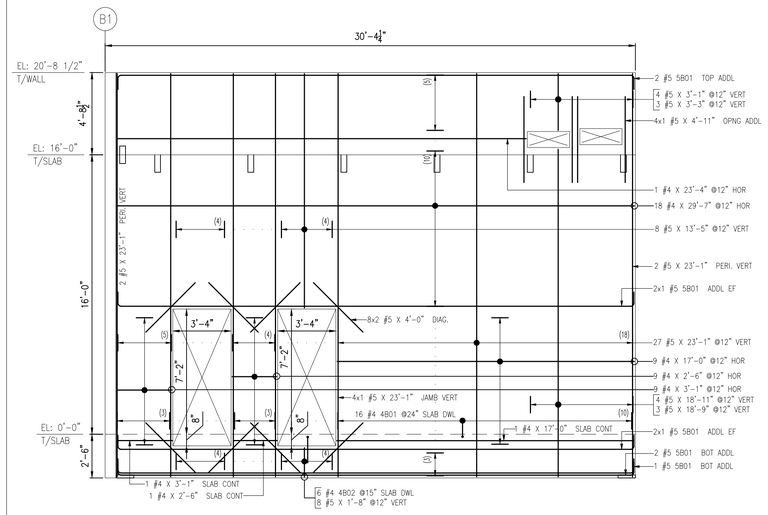

(6 1/4"THK PANEL)

PANEL–PB6

REF: BS703 (06/02/2025)
SCALE = 1/4"=1'-0"

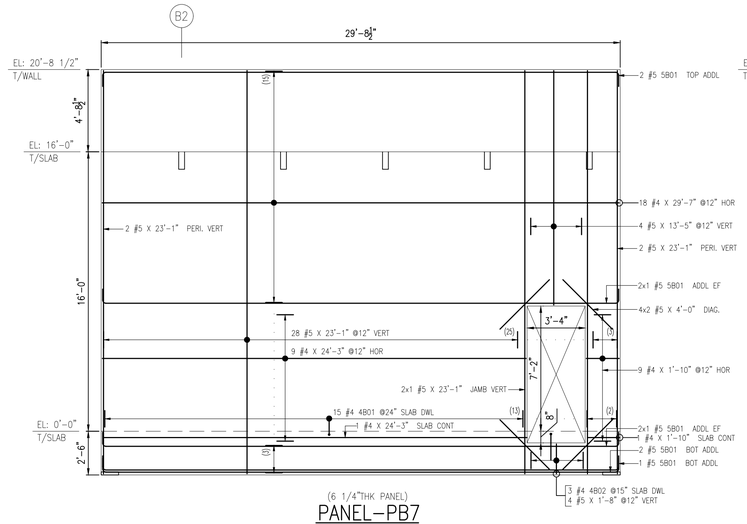

(6 1/4"THK PANEL)

PANEL–PB7

REF: BS703 (06/02/2025)
SCALE = 1/4"=1'-0"

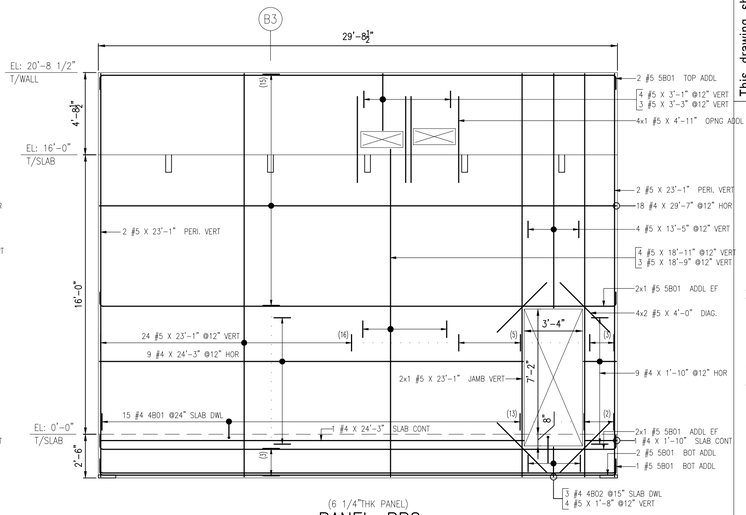

(6 1/4"THK PANEL)

PANEL–PB8

REF: BS703 (06/02/2025)
SCALE = 1/4"=1'-0"

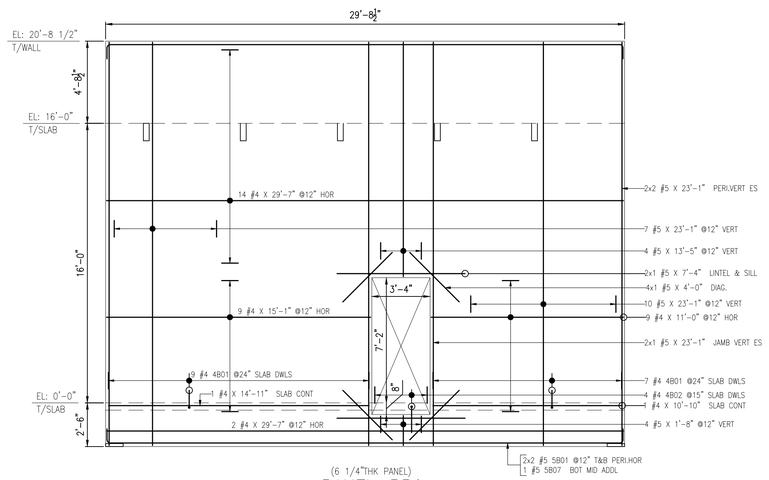

(6 1/4"THK PANEL)

PANEL–PB9

REF: BS703 (06/02/2025)
SCALE = 1/4"=1'-0"

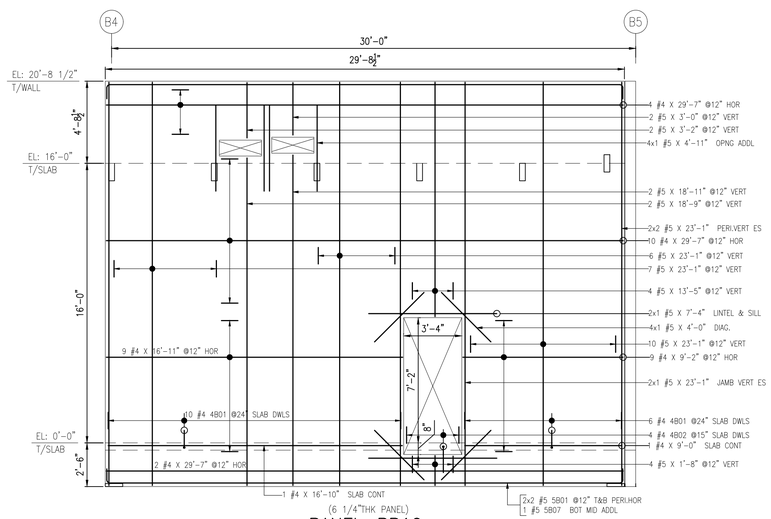

(6 1/4"THK PANEL)

PANEL–PB10

REF: BS703 (06/02/2025)
SCALE = 1/4"=1'-0"

LEGENDS:

V/VERT - VERTICAL
UNO - UNLESS NOTED OTHERWISE
TRANS - TRANSVERSE
TP - TOP OF PIER
T/SLAB - TOP OF SLAB
T/FTG - TOP OF FOOTING
T&B - TOP & BOTTOM
T - TOP
STNDEE - STANDEES
SLD - SLAB DOWEL
H/HORZ - HORIZONTAL
DWL - DOWEL
COR - CORNER
CONT - CONTINUOUS
CLR - CLEAR
CB - CORNER BAR
B/FTG - BOTTOM OF FOOTING
B/BOT - BOTTOM

NOTES:

1. TOP OF FOOTING EL. REFER PLAN
2. TOP OF SOG EL. REFER PLAN
3. COVER DETAILS:
   FOR FOOTING: BOTTOM & SIDE = 3", TOP = 2".
   FOR WALLS: 3/4"
4. STOCK LENGTH USED IS 40'-0"

1 R01B SECTION MARK

LAP NOTES:

LAP VALUE FOR PANEL

CLASS B LAP 4000 PSI FOR FDN & WALLS		
SIZE	TOP	OTHERS
#3	24"	19"
#4	32"	25"
#5	40"	31"
#6	48"	37"
#7	70"	54"
#8	80"	62"

This drawing shall be used only for the placement of the post-tensioning system. Any dimensions and/or elevations noted herein are provided only to facilitate the placement of the post-tensioning strands. Any discrepancies should be noted at the time of approval. Post-Tension Services of Texas assumes no liability for any errors in the layout or dimensions of the building.

SUBMITTAL RECORD

DATE:	FOR:
10-15-2025	FOR APPROVAL
-	-
-	-
DATE: -	1
DATE: -	2

Post-Tension Services of Texas
10501 SPARKMAN DRIVE
DALLAS, TX 75220
OFFICE: 972-845-5500
PTI POST-TENSIONING INSTITUTE CERTIFIED PLANT

PROJECT INFORMATION

CUSTOMER:	-
PROJECT NAME:	GREEN BRICK
PROJECT LOCATION:	HOUSTON, TEXAS 77027
SHEET DESCRIPTION:	PANEL DETAILS
DETAILER:	KBS

SHEET NUMBER: R07

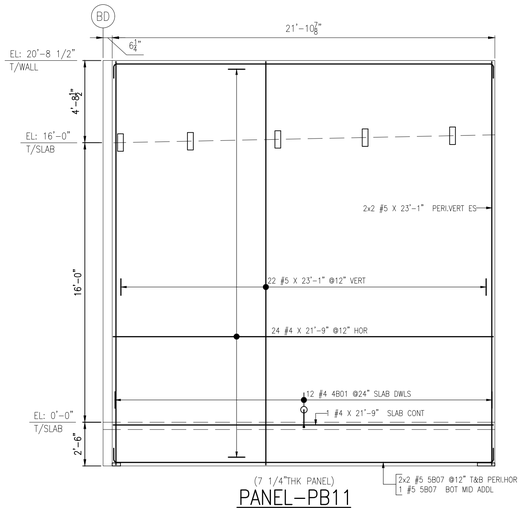

(7 1/4"THK PANEL)

PANEL–PB11

REF: BS704 (06/02/2025)
SCALE = 1/4"=1'-0"

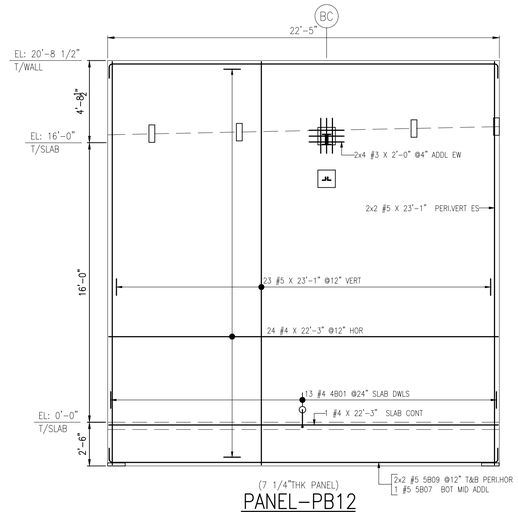

(7 1/4"THK PANEL)

PANEL–PB12

REF: BS704 (06/02/2025)
SCALE = 1/4"=1'-0"

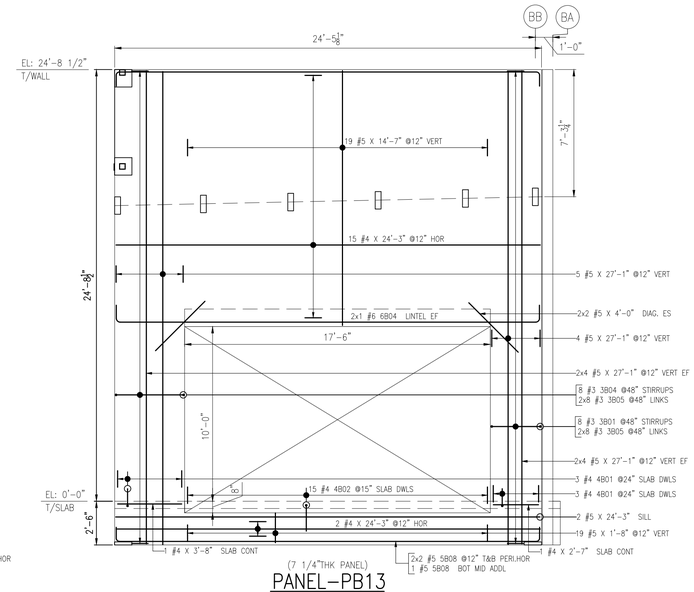

(7 1/4"THK PANEL)

PANEL–PB13

REF: BS704 (06/02/2025)
SCALE = 1/4"=1'-0"

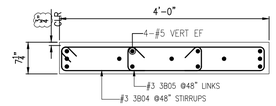

SECTION A1–A1

REF: 9/BS501 (06/02/2025)
SCALE = 3/4"=1'-0"

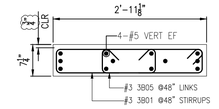

SECTION A2–A2

REF: 9/BS501 (06/02/2025)
SCALE = 3/4"=1'-0"

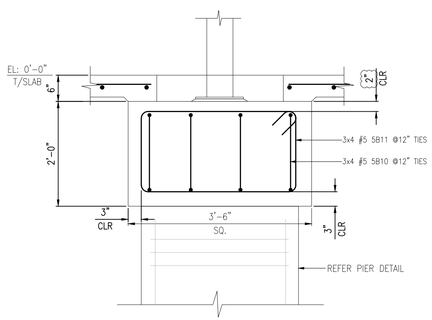

(TYPICAL @3–LOCATION)

PC1–PIER CAP

REF: 5/BS303 (06/02/2025)
SCALE = 3/4"=1'-0"

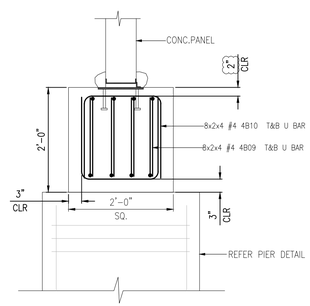

(TYPICAL @8–LOCATION)

PC2–PIER CAP

REF: 5/BS303 (06/02/2025)
SCALE = 3/4"=1'-0"

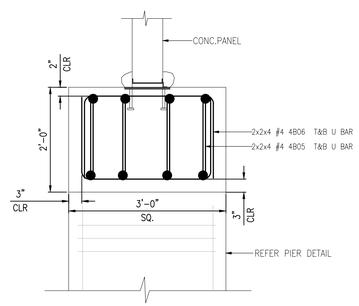

(TYPICAL @2–LOCATION)

PC3–PIER CAP

REF: 5/BS303 (06/02/2025)
SCALE = 3/4"=1'-0"

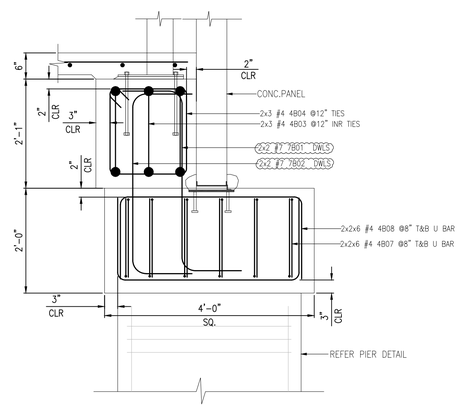

(TYPICAL @2–LOCATION)

PC4–PIER CAP

REF: 9/BS303 (06/02/2025)
SCALE = 3/4"=1'-0"

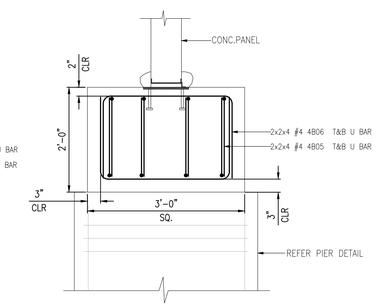

(TYPICAL @2–LOCATION)

PC5–PIER CAP

REF: 5/BS303 (06/02/2025)
SCALE = 3/4"=1'-0"

This drawing shall be used only for the placement of the post-tensioning system. Any dimensions and/or elevations noted herein are provided only to facilitate the placement of the post-tensioning strands. Any discrepancies should be noted at the time of approval. Post-Tension Services of Texas assumes no liability for any errors in the layout or dimensions of the building.

SUBMITTAL RECORD

DATE: 10-15-2025	FOR: FOR APPROVAL	
DATE: -	FOR: -	
DATE: -	FOR: -	
1 DATE: -		
2 DATE: -		

Post-Tension Services of Texas
10501 SPARKMAN DRIVE
DALLAS, TX 75220
OFFICE: 972-845-5500
POST-TENSIONING INSTITUTE CERTIFIED PLANT

PROJECT INFORMATION

CUSTOMER:	-
PROJECT NAME:	GREEN BRICK
PROJECT LOCATION:	HOUSTON, TEXAS 77027
SHEET DESCRIPTION:	PANEL & PIER CAP DETAILS
DETAILER:	KBS

SHEET NUMBER:

R08

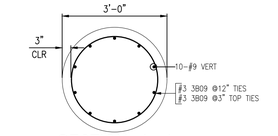

SECTION A-A
REF: 7/BS303 (06/02/2025)
SCALE = 3/4"=1'-0"

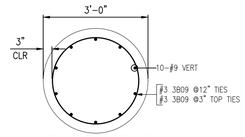

SECTION B-B
REF: 7/BS303 (06/02/2025)
SCALE = 3/4"=1'-0"

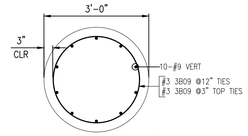

SECTION C-C
REF: 7/BS303 (06/02/2025)
SCALE = 3/4"=1'-0"

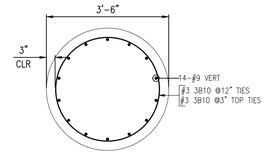

SECTION D-D
REF: 7/BS303 (06/02/2025)
SCALE = 3/4"=1'-0"

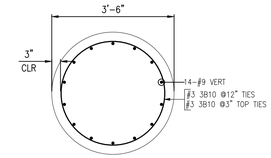

SECTION E-E
REF: 7/BS303 (06/02/2025)
SCALE = 3/4"=1'-0"

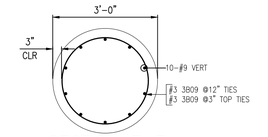

SECTION F-F
REF: 7/BS303 (06/02/2025)
SCALE = 3/4"=1'-0"

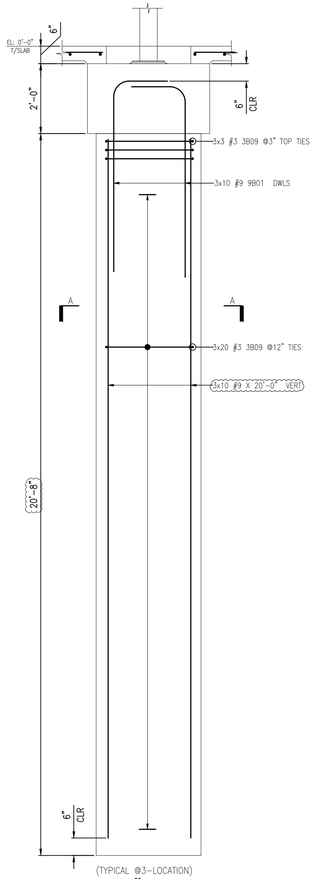

P1-36"DIA PIER
REF: 7/BS303 (06/02/2025)
SCALE = 3/4"=1'-0"

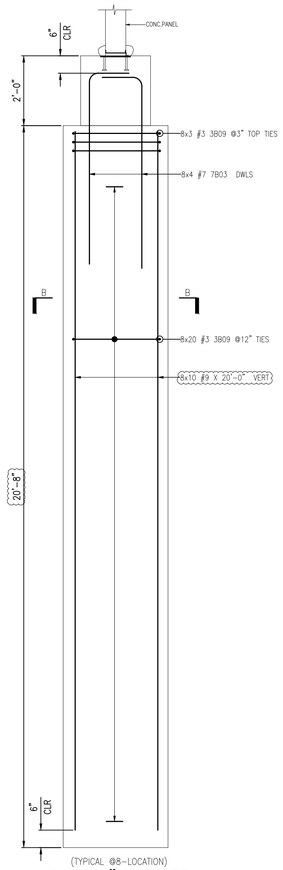

P2-36"DIA PIER
REF: 7/BS303 (06/02/2025)
SCALE = 3/4"=1'-0"

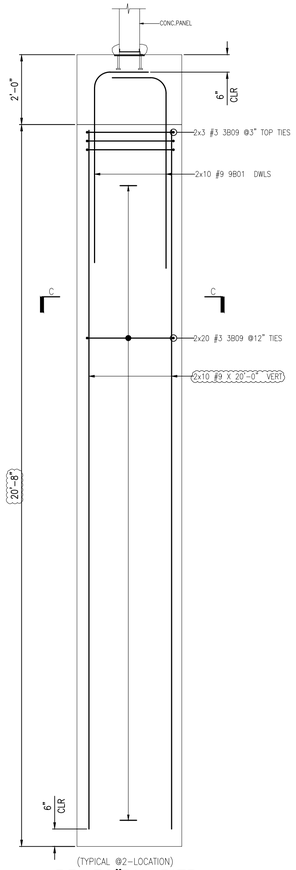

P3-36"DIA PIER
REF: 7/BS303 (06/02/2025)
SCALE = 3/4"=1'-0"

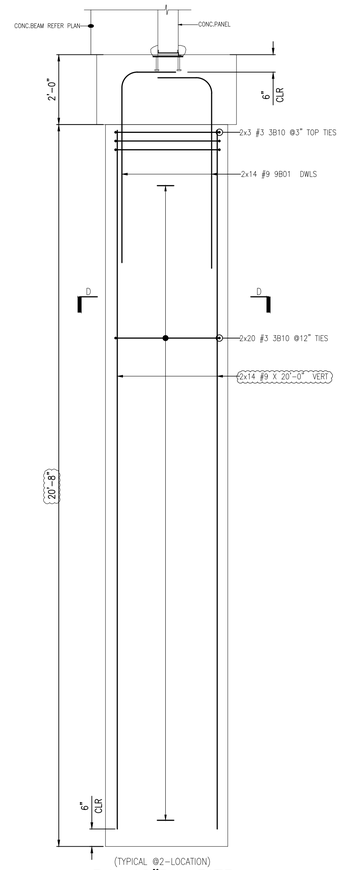

P4-42"DIA PIER
REF: 7/BS303 (06/02/2025)
SCALE = 3/4"=1'-0"

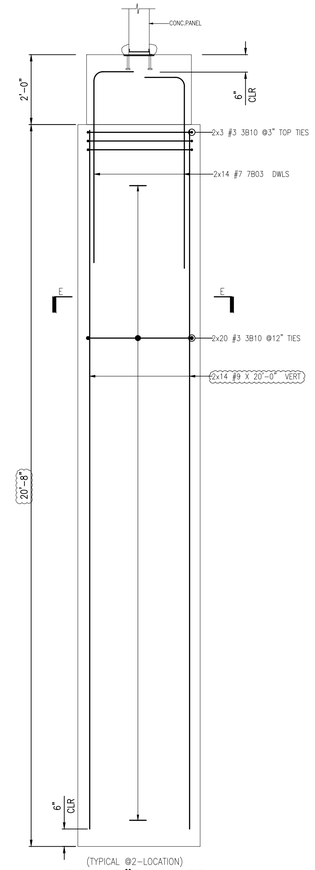

P5-42"DIA PIER
REF: 7/BS303 (06/02/2025)
SCALE = 3/4"=1'-0"

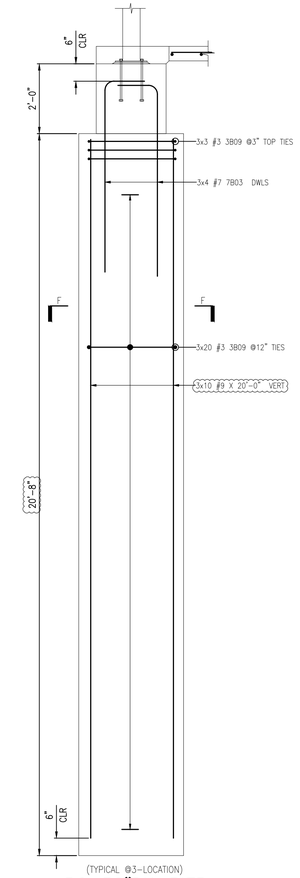

P6-36"DIA PIER
REF: 7/BS303 (06/02/2025)
SCALE = 3/4"=1'-0"

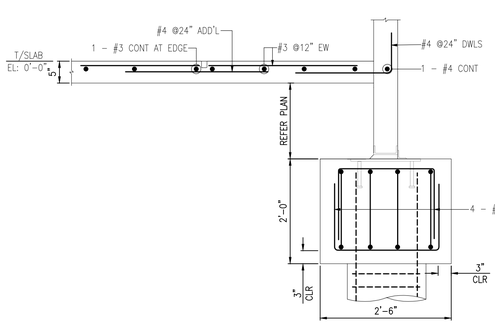

SECTION-1
REF: 4/BS304 (06/02/2025)
SCALE = 3/4"=1'-0"

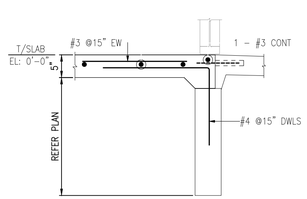

SECTION-2
REF: 2/BS304 (06/02/25)
SCALE = 3/4"=1'-0"

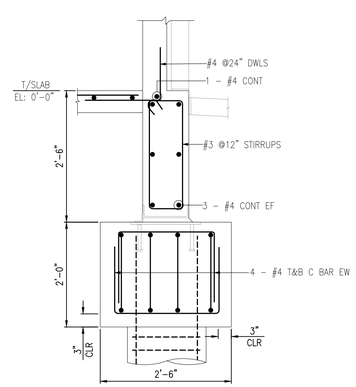

SECTION-3
REF: 2/BS305 (06/02/25)
SCALE = 3/4"=1'-0"

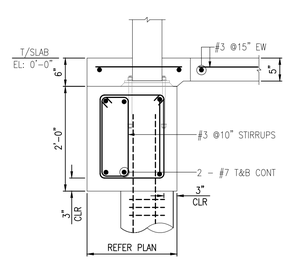

SECTION-4
REF: 5/BS303 (06/02/25)
SCALE = 3/4"=1'-0"

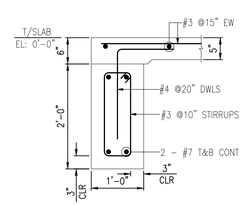

SECTION-5
REF: 2/BS303 (06/02/25)
SCALE = 3/4"=1'-0"

This drawing shall be used only for the placement of the post-tensioning system. Any dimensions and/or elevations noted herein are provided only to facilitate the placement of the post-tensioning strands. Any discrepancies should be noted at the time of approval. Post-Tension Services of Texas assumes no liability for any errors in the layout or dimensions of the building.

SUBMITTAL RECORD

DATE: 10-15-2025	FOR: FOR APPROVAL	
DATE: -	FOR: -	
DATE: -	FOR: -	
1 DATE: -		
2 DATE: -		

Post-Tension Services of Texas
10501 SPARKMAN DRIVE
DALLAS, TX 75220
OFFICE: 972-845-5500
PTI POST-TENSIONING INSTITUTE CERTIFIED PLANT

PROJECT INFORMATION

CUSTOMER:	-
PROJECT NAME:	GREEN BRICK
PROJECT LOCATION:	HOUSTON, TEXAS 77027
SHEET DESCRIPTION:	PIER & SECTION DETAILS
DETAILER:	KBS

SHEET NUMBER: R09